Round 1 - Thursday, January 6, 2022

SHOTLINK

Sentry Tournament of Champions

Plantation Course at Kapalua

1 — Green Depth **37**

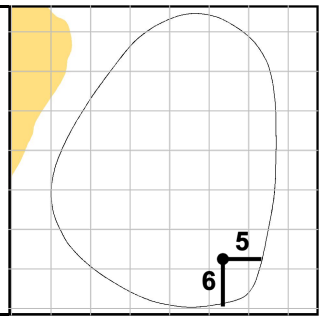

2 — Green Depth **38**

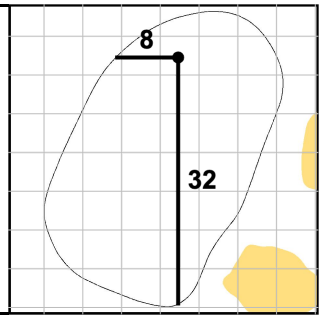

3 — Green Depth **34**

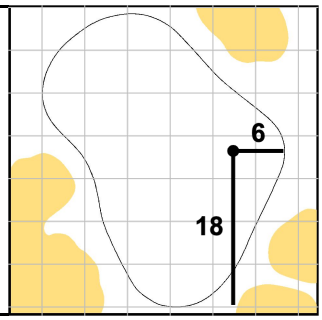

4 — Green Depth **31**

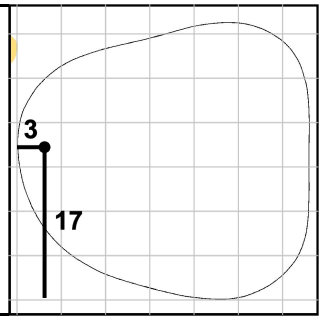

5 — Green Depth **33**

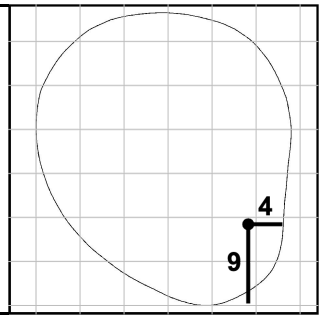

6 — Green Depth **38**

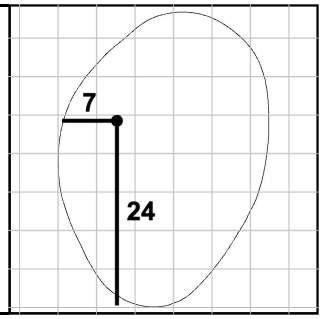

7 — Green Depth **50**

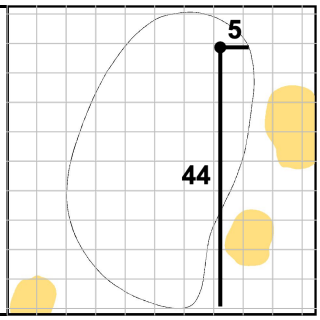

8 — Green Depth **35**

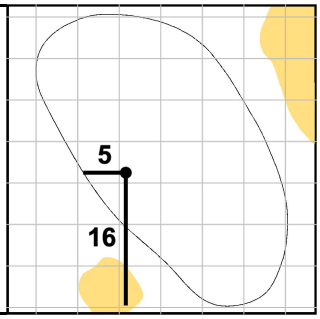

9 — Green Depth **26**

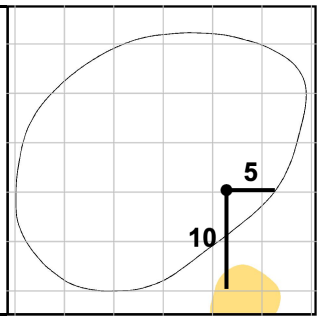

10 — Green Depth **36**

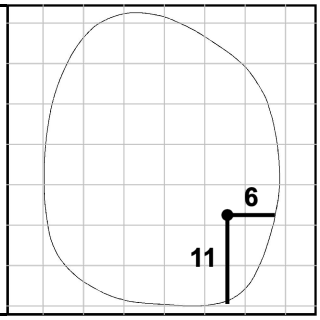

11 — Green Depth **31**

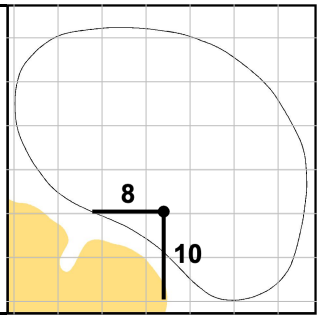

12 — Green Depth **27**

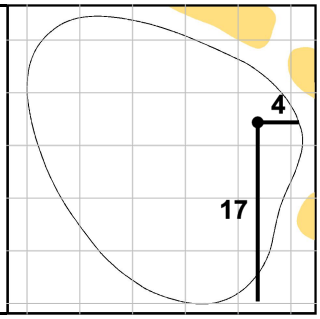

13 — Green Depth **36**

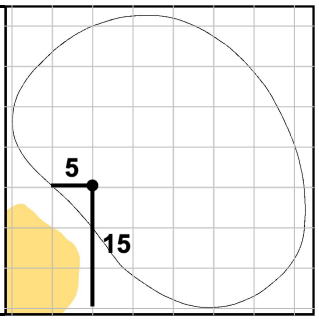

14 — Green Depth **24**

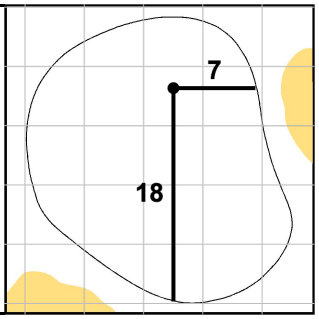

15 — Green Depth **30**

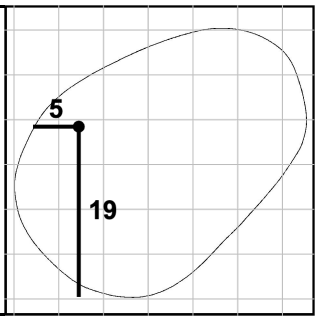

16 — Green Depth **28**

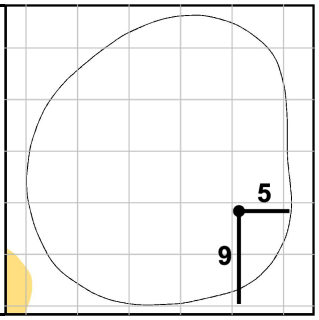

17 — Green Depth **36**

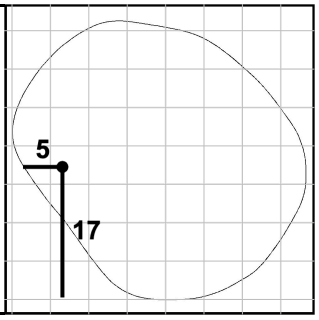

18 — Green Depth **46**

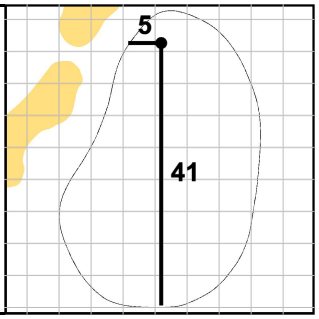

Each side of a complete square on the green represents 5 YARDS.

Wednesday, January 5, 2022 11:07:53 AM